1852862
Empress Table
Parts List

A.	Top Tray	1 pc
B.	Shelf	1 pc
C.	Legs	4 pcs
D.	Allen Head Bolts	8 pcs
E.	Flat Washers	8 pcs
F.	Phillips Head Screws	4 pcs
G.	Allen Head Wrench	1 pc
H.	Phillips Head Screwdriver	1 pc

∗ Please make sure that you have all the parts and hardware indicated above before you begin assembly of this item.
∗ Use the hardware illustrations to determine correct piece and size.
∗ This item should be assembled on a soft surface to prevent scratching the finish during assembly.
∗ This item may require periodic tightening.

Hardware Illustrations

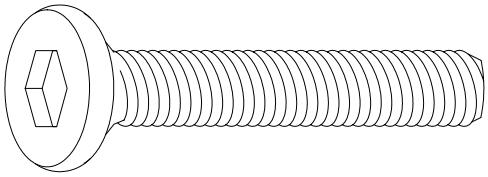

D. Allen Head Bolt

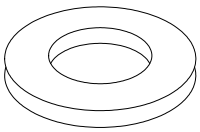

E. Flat Washer

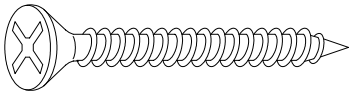

F. Phillips Head Screw

1852862
Empress Table

Attach Three Legs and Shelf

Parts required

A.	Top Tray	1 pc	E.	Flat Washers	6 pcs
B.	Shelf	1 pc	F.	Phillips Head Screws	3 pcs
C.	Legs	3 pcs	G.	Allen Head Wrench	1 pc
D.	Allen Head Bolts	6 pcs	H.	Phillips Head Screwdriver	1 pc

1. **Attach Three Legs (C)** Put the Top Tray (A) upside down on a soft surface. Align the pre-drilled holes in the " L " shaped metal plates on the top of the three Legs (C) with the pre-threaded holes in the apron of Top Tray (A). Secure with Allen Head Bolts (D) and Flat Washers (E) using Allen Head Wrench (G). See illustration #1.
2. **Attach Shelf (B)** Align the pre-drilled holes in the Shelf (B) with the pre-threaded holes in the Legs (C). Make sure the finished surface faces the underside of Top Tray (A). Secure with Phillips Head Screws (F) using Phillips Head Screwdriver (H). See illustration #1.

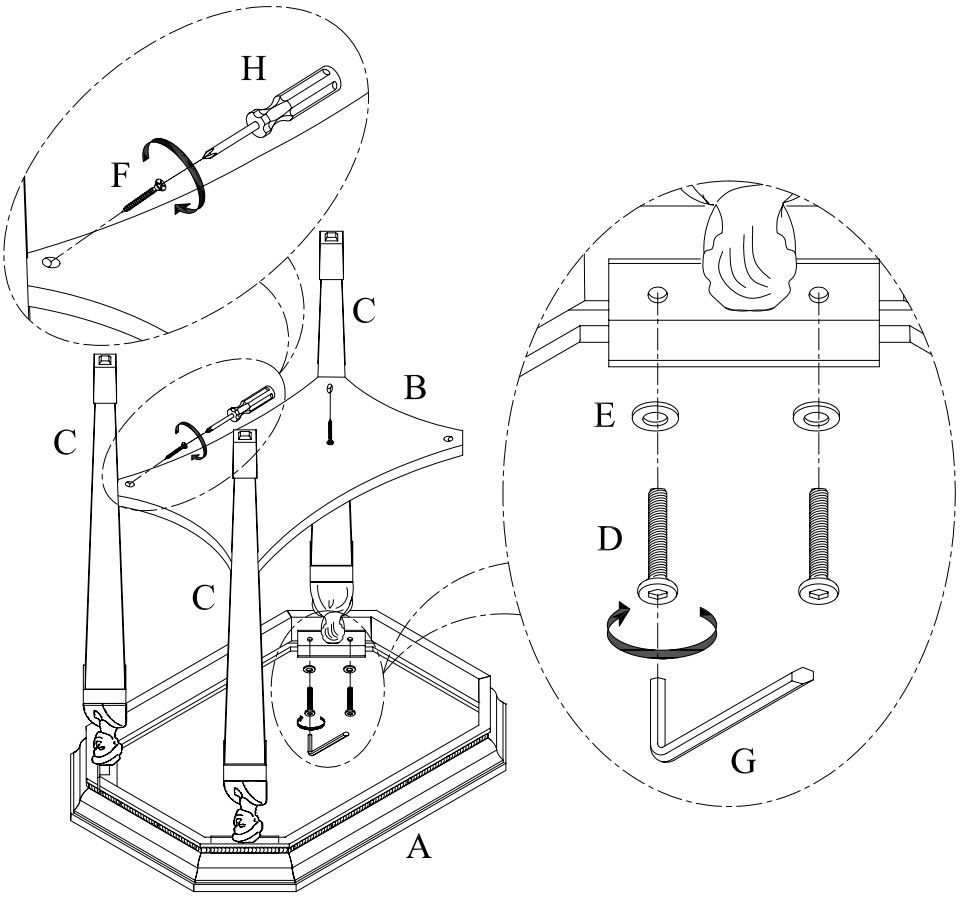

Illustration # 1

1852862
Empress Table

Attach the Fourth Leg

Parts required

A.	Top Tray	1 pc	E.	Flat Washers	2 pcs
B.	Shelf	1 pc	F.	Phillips Head Screws	1 pcs
C.	Leg	1 pc	G.	Allen Head Wrench	1 pc
D.	Allen Head Bolts	2 pcs	H.	Phillips Head Screwdriver	1 pc

3. **Attach the Fourth Leg (C)** Refer to step #1 and #2 to attach the fourth Leg (C) to the Top Tray (A) and Shelf (B). See illustration # 2.

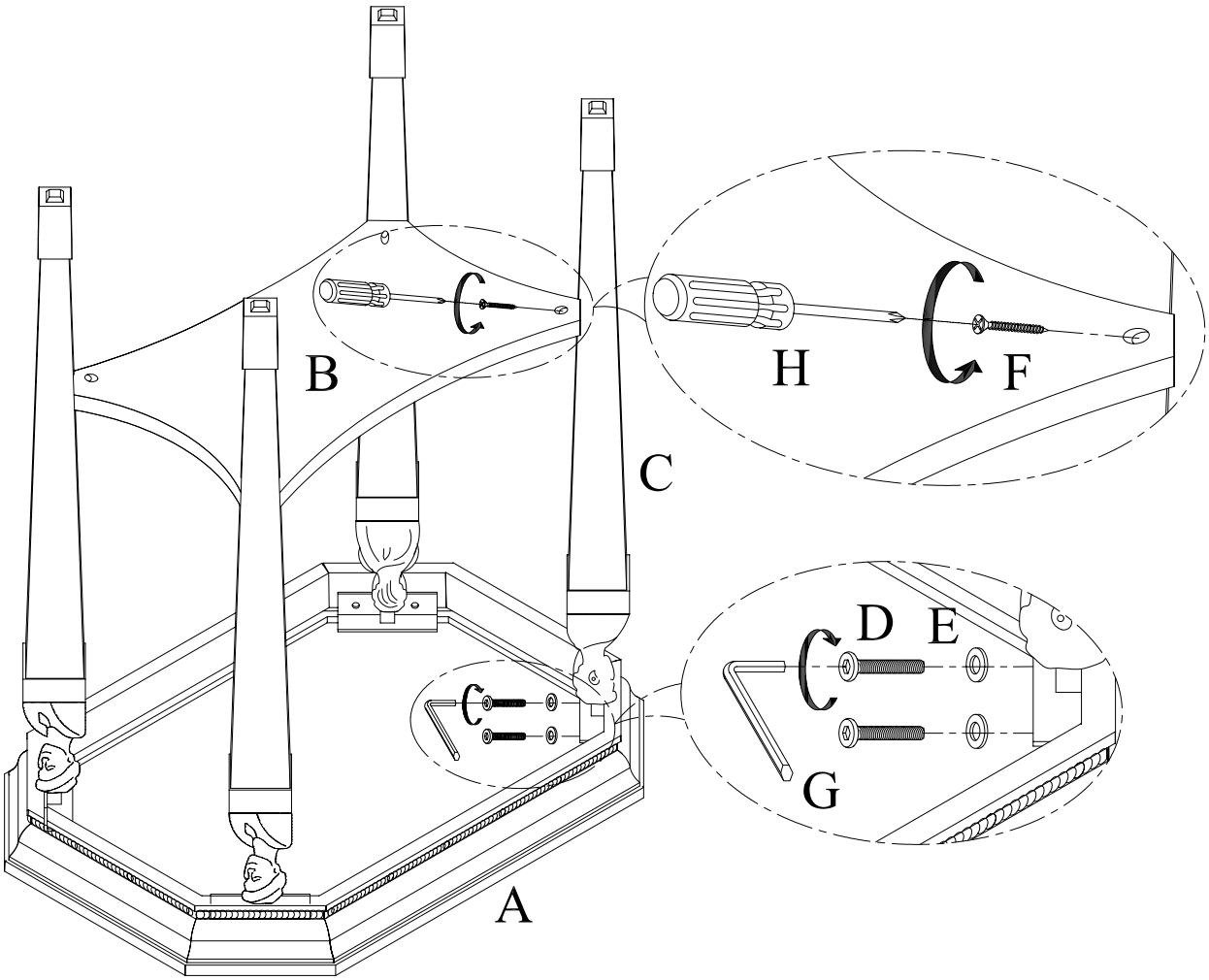

Illustration # 2

R2-12-3-03